Mobility that connects

We combine Swiss quality, technical expertise and innovative strength. With RopeTwin, Bartholet creates high-performance, flexible and sustainable ropeway solutions that connect people, places and experiences – for modern mobility in the future.

bartholet

we move. we connect.

Bartholet Ropeways AG
Lochrietstrasse 21
CH–8890 Flums

T +41 81 720 10 60
info@bartholet.swiss
bartholet.swiss

Certified to ISO9001, EN1090 and ISO3834

RopeTwin®

Latest-generation aerial tramways

bartholet

we move. we connect.

RopeTwin – Mastering challenges

Aerial tramways are the ideal solution for overcoming even the most demanding terrain conditions.

Whether steep mountain slopes, deep gorges or long spans – aerial tramways provide access to remote locations that are difficult or impossible to reach with other means of transport.

Thanks to continuous development, our latest-generation aerial tramways offer even greater efficiency and performance. By leveraging proven components across the group, we ensure maximum compatibility and flexibility.

The modular and compact design achieves a high standard that enables rapid project implementation. When limits are pushed, Bartholet stands out with innovative solutions.

Another key feature of the latest generation is outstanding serviceability, which simplifies maintenance and significantly reduces operating costs.

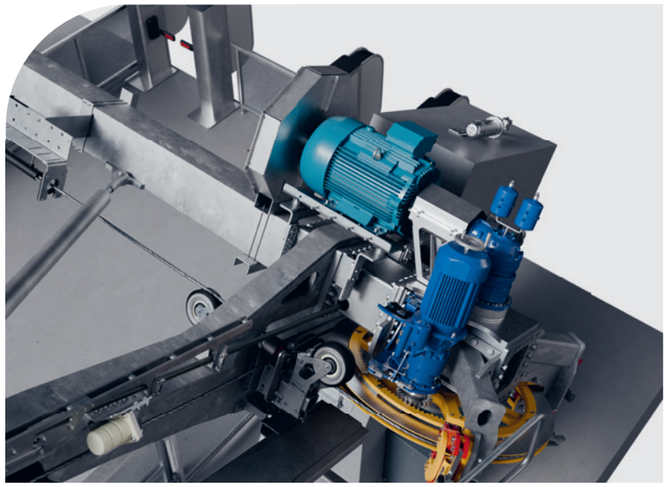

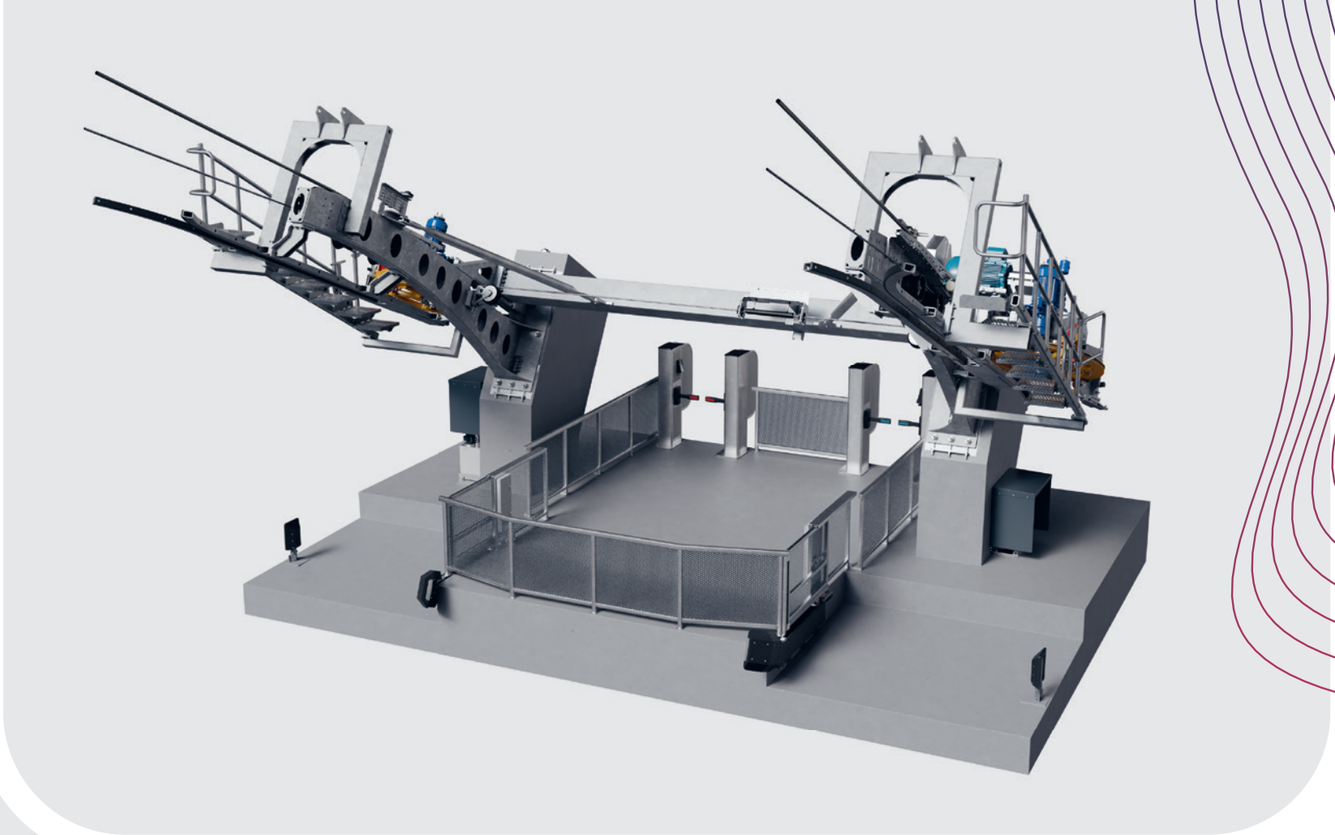

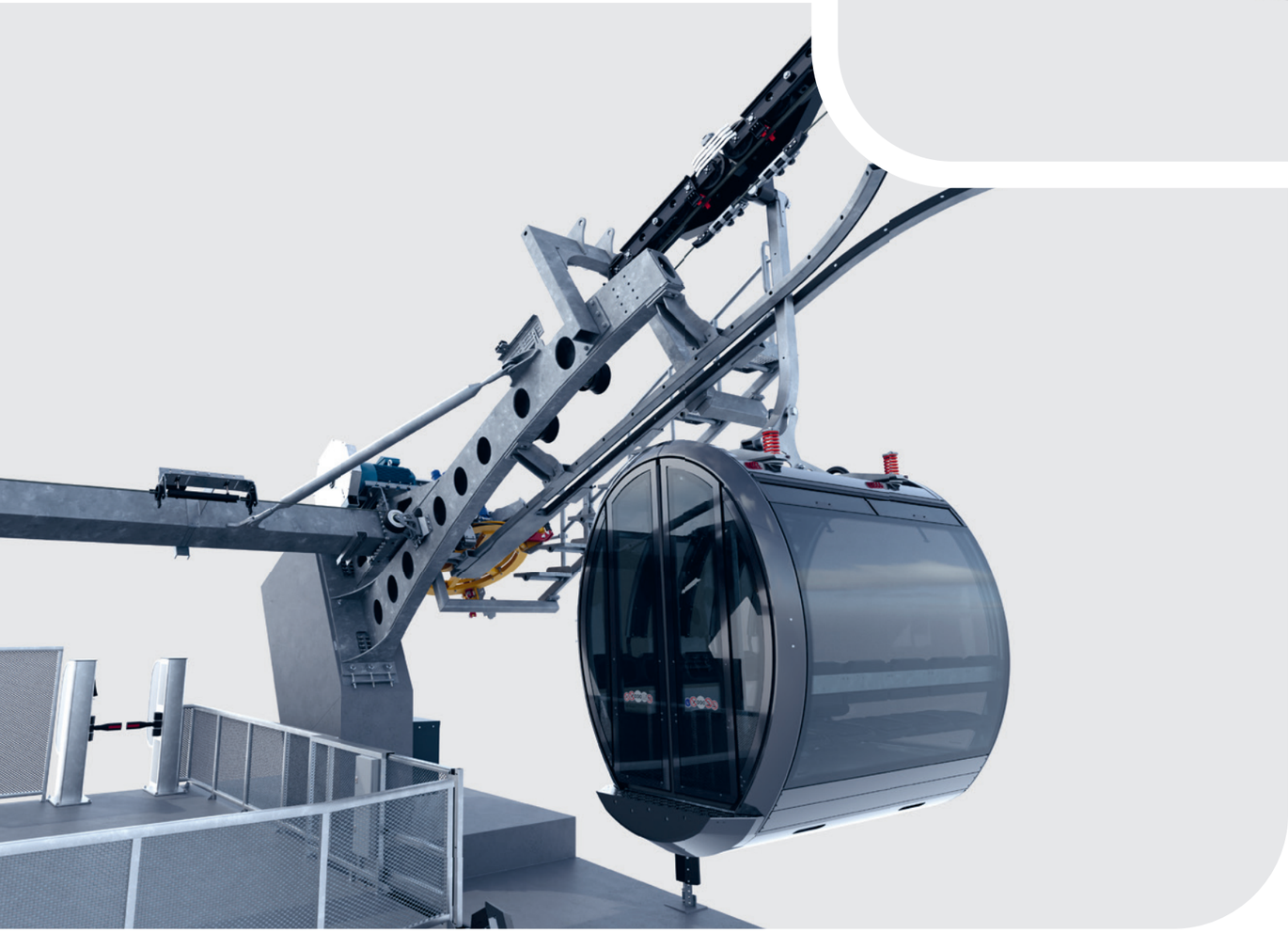

Stations

STATION DESIGN
- Concrete columns
- Track gauge: max. 11 m
- Inclination: max. ±40°
- High crossbeams facilitate passenger access

ACCESS FROM THE REAR
- Guaranteed for all station inclinations

ACCESS FROM THE FRONT AND REAR
- Improved passenger flow and thus higher transport capacity

STATION SADDLE
- Modular deflection angles

EXTERNAL MAINTENANCE PLATFORM
- For optimal access to haul rope sheaves and carriage components
- Vehicle can be serviced directly at the station saddle

LAUNCH RAMP
- Reduces starting and connection power by up to 20 %

FOB
- Various solutions for unattended stations – from semi- to fully automated ropeways

DRIVE SYSTEM
- Power: max. 220 kW
- Service brake: controlled for enhanced comfort

SYSTEM DATA
- Speed: max. 7 m/s
- Line inclination: max. 50°

OPTIONAL
- Omission of station roof
- Damped haul rope sheaves for even greater comfort

© Karin Lüchinger, Berggasthaus Staubern

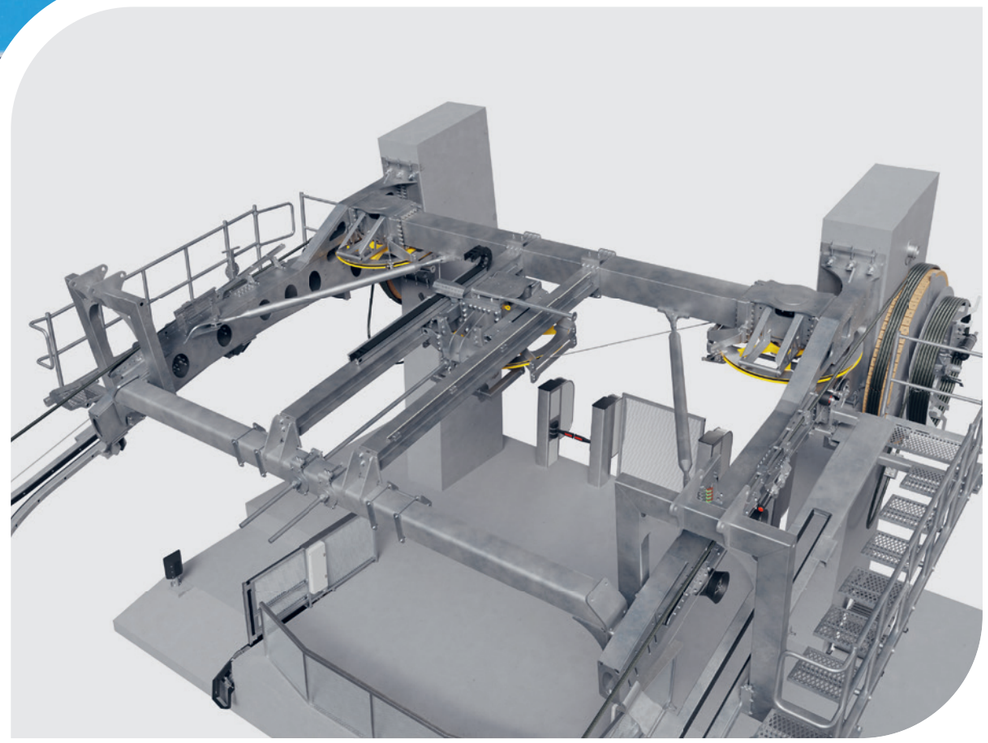

Without auxiliary drive device

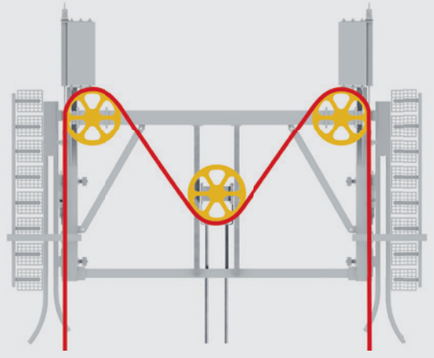

With auxiliary drive device

HAUL ROPE TENSIONING SYSTEMS

Fixed tension
- Cost-efficient in procurement

Adjusting device
- 2.5 m adjustment travel
- Largely eliminates the need for rope splicing

Hydraulic tensioning device
- 2.5 m tensioning travel
- Largely eliminates the need for rope splicing
- Constant rope tension

Vehicles

PANORAMA CABIN
Our panorama cabin, designed by Studio F. A. Porsche, accommodates up to 15 passengers and allows for efficient passenger transport. With a 90 cm wide door opening, it is also ideal for material transport.

Design by
STUDIO F·A·PORSCHE

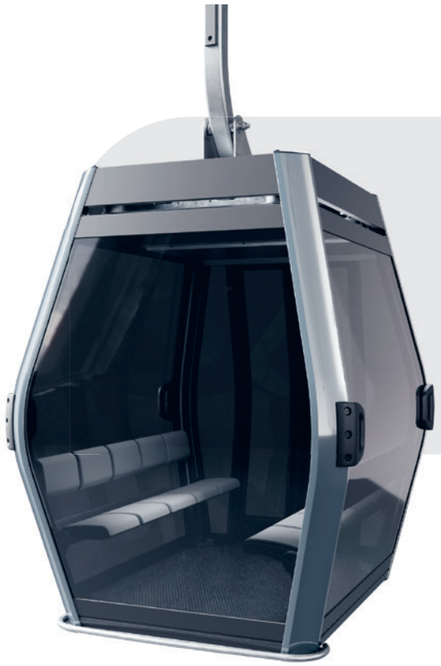

DIAMOND EVO CABIN
The proven Sigma cabins accommodate up to 18 passengers, thus expanding the capacity limits of small aerial tramways. They impress with thoughtful design, high quality, and comfort.

MATERIAL AND MAINTENANCE VEHICLE
With a maximum payload of 1200 kg, it is particularly suitable for transporting materials and performing maintenance work.

Optional: Also suitable for passenger transport

CARRIAGE
The 8-sheave carriage, clamped to the haul rope, is particularly compact, positively affecting the adjacent assemblies. Thanks to the innovative polyamide rollers, noise emissions are reduced, making the ride especially quiet and comfortable.

Optional: Tool for easy decoupling of the carriage from the haul rope for de-icing trips.

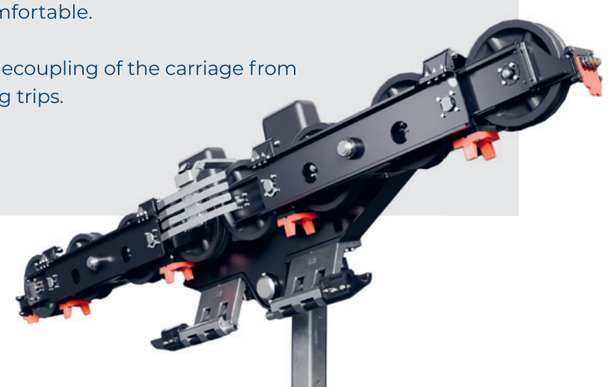

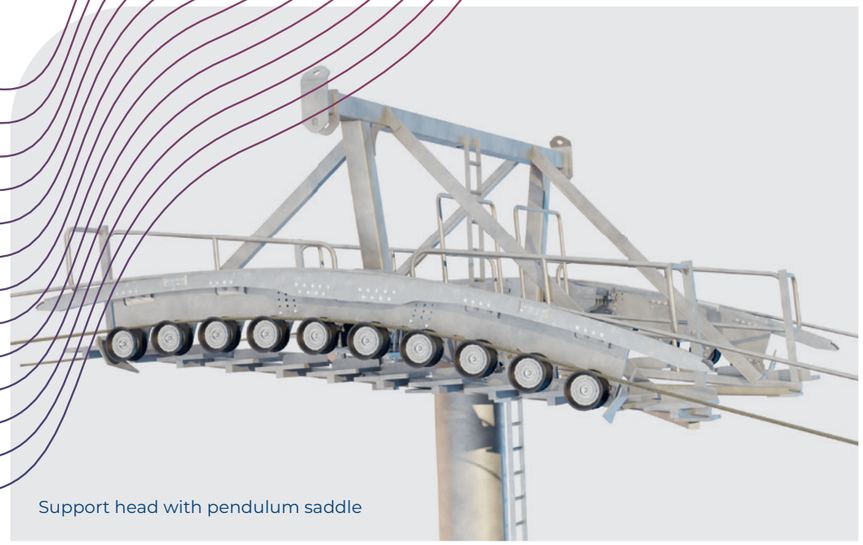

Support head with pendulum saddle

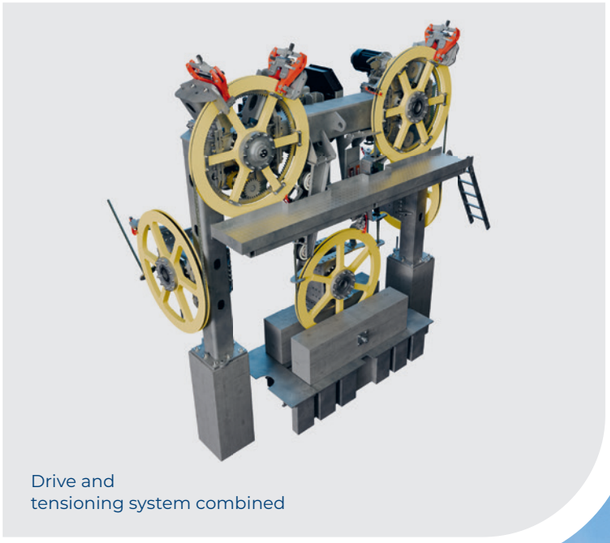

Drive and
tensioning system combined

Support

The proven support structure of circulating ropeways is also used in RopeTwin. The optimized support saddles reduce both support and foundation forces.

Particular attention was given to serviceability, for example, roller removal without disassembling the bracket.

Optional: Damped haul rope sheaves for even greater comfort.

Recovery system

RopeTwin comes standard with the integrated Bartholet Evacuation System (BES) – a comprehensive evacuation concept that ensures the highest safety standards.

It allows vehicles to be safely and controlledly returned to the stations under all conditions, eliminating the need for rope-based evacuations or external recovery systems.

All mechanical components of the system are fully designed for BES. In addition, multiple redundant systems ensure that evacuation can always be carried out efficiently, safely, and in a controlled manner.

Retrofit

Does your ropeway need a retrofit or performance upgrade? We provide our expertise and innovative approaches to make your ropeway sustainable and efficient again.

From planning to commissioning, your ropeway and its requirements are at the center of our work. The developed components of the RopeTwin series can be seamlessly used in retrofits and customized to your system. This significantly reduces conversion times.

We are pleased to support you in implementing the best technical and economical retrofit solution.
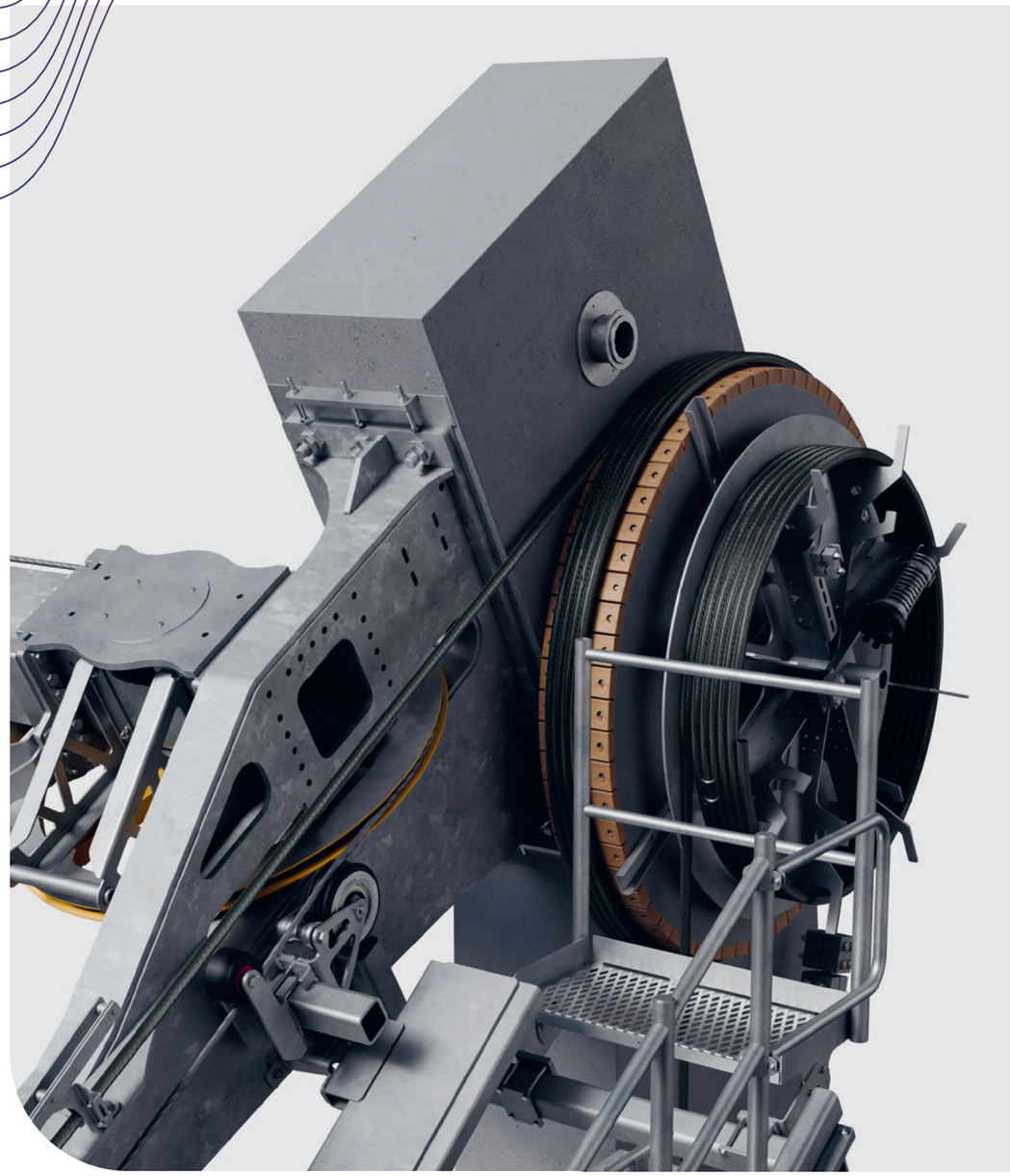
For more information about aerial tramways, please visit-
bartholet.swiss/en